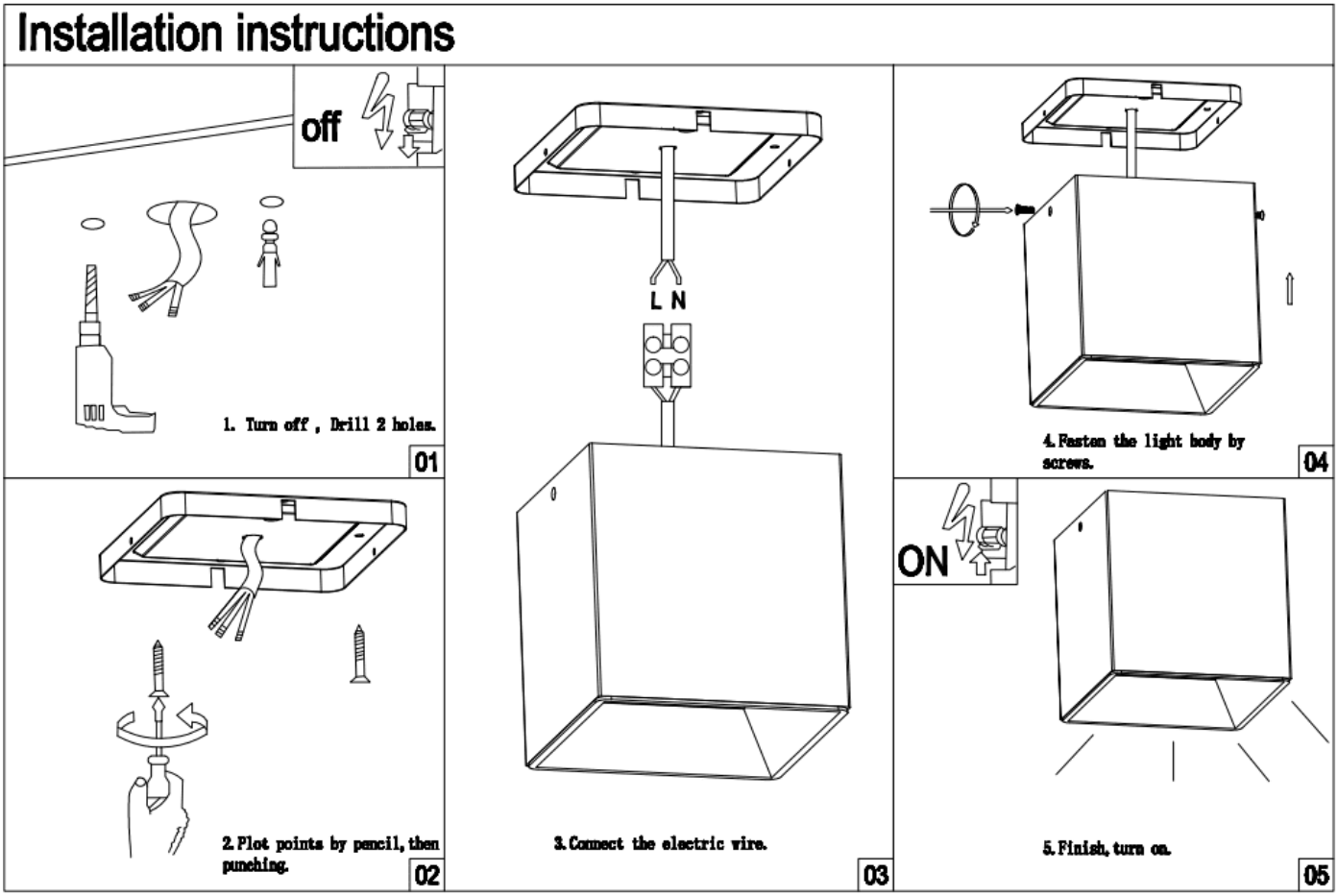Code article 86.OC01.1311.01